SECTION CO

ENGINE COOLING SYSTEM

CONTENTS

PRECAUTIONS **2**
Precautions for Liquid Gasket 2
LIQUID GASKET APPLICATION PROCEDURE 2
PREPARATION **3**
Special Service Tools 3
Commercial Service Tools 3
OVERHEATING CAUSE ANALYSIS **4**
Troubleshooting Chart 4
COOLING SYSTEM **6**
Cooling Circuit 6
System Chart 7
ENGINE COOLANT **8**
Inspection 8
CHECKING ENGINE COOLANT LEVEL 8
CHECKING LEAKAGE 8
Changing Engine Coolant 8
DRAINING ENGINE COOLANT 8
REFILLING ENGINE COOLANT 9
FLUSHING COOLING SYSTEM 10
RADIATOR **11**
Removal and Installation 11
REMOVAL 11
INSTALLATION 12
INSPECTION AFTER INSTALLATION 12
Checking Radiator Cap 12
Checking Radiator 12
RADIATOR (ALUMINUM TYPE) **14**
Disassembly and Assembly 14
PREPARATION 14
DISASSEMBLY 14
ASSEMBLY 15
INSPECTION 17
COOLING FAN **18**
Removal and Installation 18
REMOVAL 18
INSTALLATION 18
INSPECTION AFTER INSTALLATION 18
Disassembly and Assembly 19
DISASSEMBLY 19
INSPECTION AFTER DISASSEMBLY 19
ASSEMBLY 19
WATER PUMP **20**
Removal and Installation 20
REMOVAL 20
INSPECTION AFTER REMOVAL 21
INSTALLATION 21
INSPECTION AFTER INSTALLATION 21
THERMOSTAT AND WATER CONTROL VALVE **22**
Removal and Installation 22
REMOVAL 22
INSPECTION AFTER REMOVAL 23
INSTALLATION 23
INSPECTION AFTER INSTALLATION 23
SERVICE DATA AND SPECIFICATIONS (SDS) **24**
Standard and Limit 24
ENGINE COOLANT CAPACITY (APPROXIMATE) 24
RADIATOR 24
THERMOSTAT 24
WATER CONTROL VALVE 24

PRECAUTIONS

PFP:00001

Precautions for Liquid Gasket

ABS00CK4

LIQUID GASKET APPLICATION PROCEDURE

1. Remove old liquid gasket adhering to the liquid gasket application surface and the mating surface.
   - Remove liquid gasket completely from the liquid gasket application surface, mounting bolts, and bolt holes.
2. Wipe the liquid gasket application surface and the mating surface with white gasoline (lighting and heating use) to remove adhering moisture, grease and foreign materials.
3. Attach liquid gasket tube to the tube presser [SST: WS39930000 (—)].
   Use Genuine RTV Silicone Sealant or equivalent. Refer to GI-48, "RECOMMENDED CHEMICAL PRODUCTS AND SEALANTS" .
   - Within 5 minutes of liquid gasket application, install the mating component.
   - If liquid gasket protrudes, wipe it off immediately.
   - Do not retighten mounting bolts or nuts after the installation.
   - Wait 30 minutes or more after installation before refilling engine oil and engine coolant.

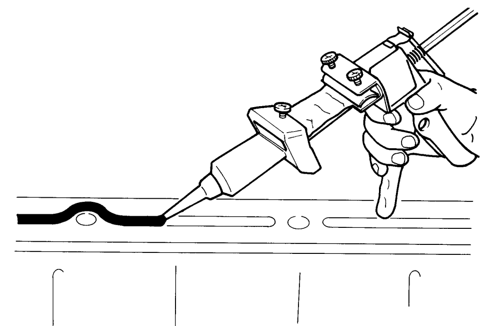

EMA0622D

PREPARATION

PFP:00002

Special Service Tools

ABS00CK5

The actual shapes of Kent-Moore tools may differ from those of special service tools illustrated here.

Tool number (Kent-Moore No.) Tool name		Description
EG17650301 (J33984-A) Radiator cap tester adapter	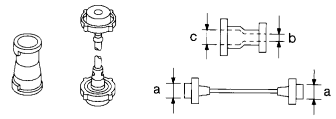 S-NT564	Adapting radiator cap tester to radiator cap and radiator filler neck **a: 28 (1.10) dia.** **b: 31.4 (1.236) dia.** **c: 41.3 (1.626) dia.** Unit: mm (in)
KV99103510 (—) Radiator plate pliers A	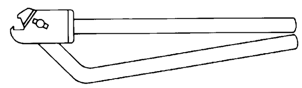 S-NT224	Installing radiator upper and lower tanks
KV99103520 (—) Radiator plate pliers B	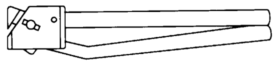 S-NT225	Removing radiator upper and lower tanks
WS39930000 (—) Tube presser	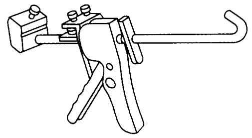 S-NT052	Pressing the tube of liquid gasket

Commercial Service Tools

ABS00CK6

Tool name		Description
Power tool	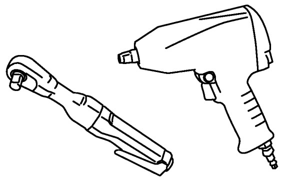 PBIC0190E	Loosening nuts and bolts
Radiator cap tester	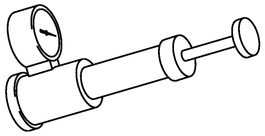 PBIC1982E	Checking radiator and radiator cap

OVERHEATING CAUSE ANALYSIS

PFP:00012

Troubleshooting Chart

ABS00CK7

	Symptom		Check items	
Cooling system parts malfunction	Poor heat transfer	Water pump malfunction	Worn or loose drive belt	—
		Thermostat and water control valve stuck closed	—	
		Damaged fins	Dust contamination or paper clogging	
			Physical damage	
		Clogged radiator cooling tube	Excess foreign material (rust, dirt, sand, etc.)	
	Reduced air flow	Cooling fan does not operate	Fan assembly	—
		High resistance to fan rotation		
		Damaged fan blades		
	Damaged radiator shroud	—	—	—
	Improper engine coolant mixture ratio	—	—	—
	Poor engine coolant quality	—	Engine coolant viscosity	—
	Insufficient engine coolant	Engine coolant leaks	Cooling hose	Loose clamp
				Cracked hose
			Water pump	Poor sealing
			Radiator cap	Loose
				Poor sealing
			Radiator	O-ring for damage, deterioration or improper fitting
				Cracked radiator tank
				Cracked radiator core
			Reservoir tank	Cracked reservoir tank
		Overflowing reservoir tank	Exhaust gas leaks into cooling system	Cylinder head deterioration
				Cylinder head gasket deterioration

OVERHEATING CAUSE ANALYSIS

<table>
<tr><th></th><th colspan="2">Symptom</th><th colspan="2">Check items</th></tr>
<tr><td rowspan="13">Except cooling system parts malfunction</td><td rowspan="7">—</td><td rowspan="7">Overload on engine</td><td rowspan="3">Abusive driving</td><td>High engine rpm under no load</td></tr>
<tr><td>Driving in low gear for extended time</td></tr>
<tr><td>Driving at extremely high speed</td></tr>
<tr><td>Power train system malfunction</td><td rowspan="4">—</td></tr>
<tr><td>Installed improper size wheels and tires</td></tr>
<tr><td>Dragging brakes</td></tr>
<tr><td>Improper ignition timing</td></tr>
<tr><td rowspan="6">Blocked or restricted air flow</td><td>Blocked bumper</td><td>—</td><td rowspan="6">—</td></tr>
<tr><td rowspan="2">Blocked radiator grille</td><td>Installed car brassiere</td></tr>
<tr><td>Mud contamination or paper clogging</td></tr>
<tr><td>Blocked radiator</td><td>—</td></tr>
<tr><td>Blocked condenser</td><td rowspan="2">Blocked air flow</td></tr>
<tr><td>Installed large fog lamp</td></tr>
</table>

COOLING SYSTEM

PFP:21020

Cooling Circuit

ABS00CK8

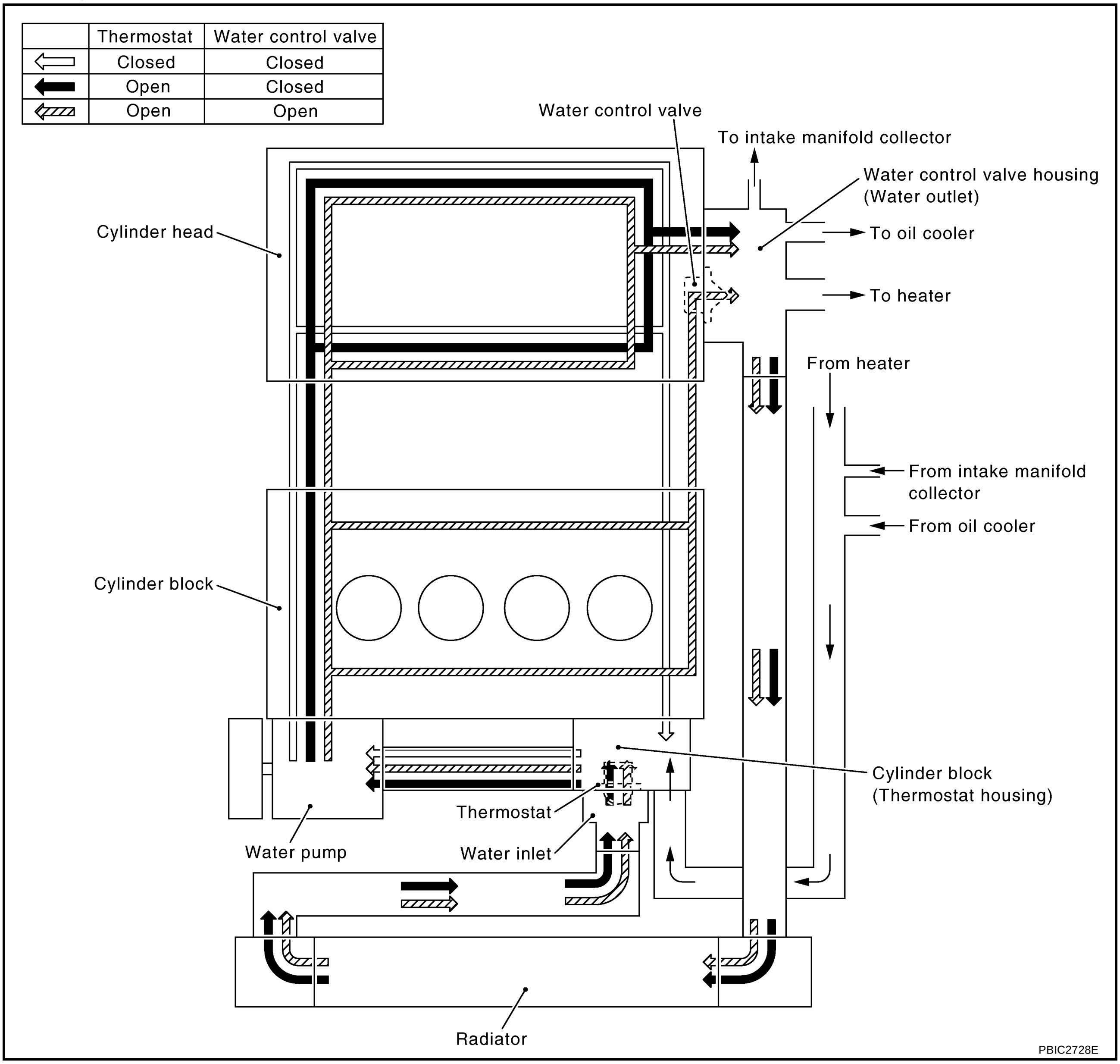

System Chart

ABS00CK9

	Thermostat	Water control valve
	Closed	Closed
	Open	Closed
	Open	Open

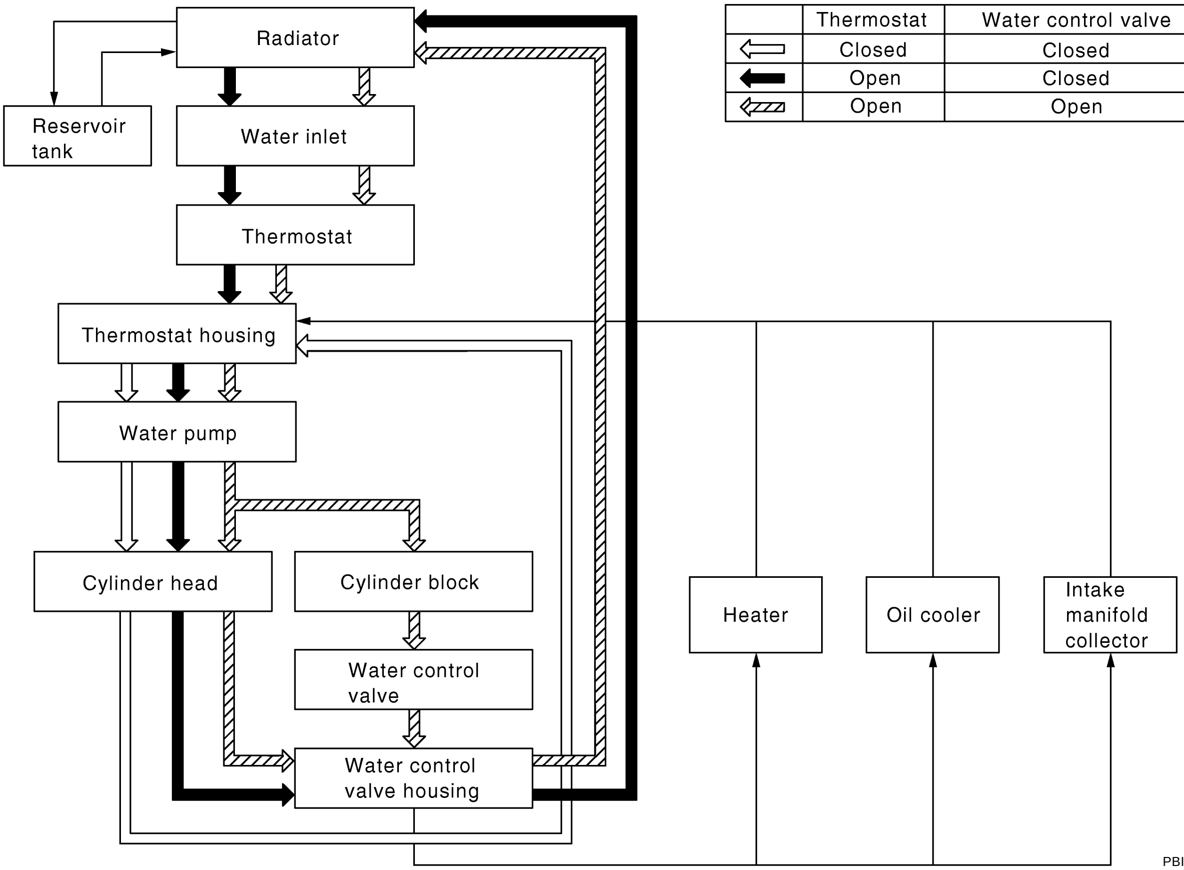

PBIC2727E

ENGINE COOLANT

PFP:KQ100

Inspection

ABS00CKA

CHECKING ENGINE COOLANT LEVEL

- Check if the reservoir tank engine coolant level is within “MIN” to “MAX” range when the engine is cool.
- Adjust engine coolant level as necessary.

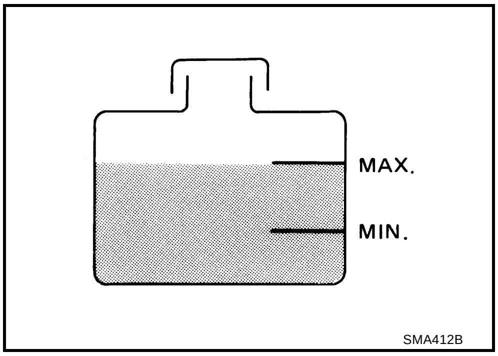

SMA412B

CHECKING LEAKAGE

- To check for leakage, apply pressure to the cooling system with a radiator cap tester (commercial service tool) and the radiator cap tester adapter [SST].

  Testing pressure:

  157 kPa (1.6 kg/cm^2 , 23 psi)

  WARNING:
  Do not remove radiator cap when the engine is hot. Serious burns could occur from high-pressure engine coolant escaping from radiator.

  CAUTION:
  Higher test pressure than specified may cause radiator damage.

  NOTE:
  In a case that engine coolant decreases, replenish radiator with engine coolant.

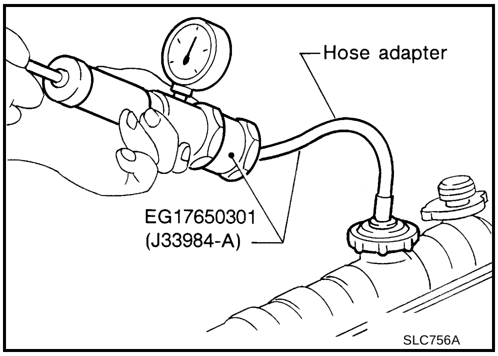

SLC756A

- If anything is found, repair or replace the damaged parts.

Changing Engine Coolant

ABS00CKB

WARNING:

- **To avoid being scalded, do not change engine coolant when the engine is hot.**
- **Wrap a thick cloth around radiator cap and carefully remove the cap. First, turn the cap a quarter of a turn to release built-up pressure. Then turn the cap all the way.**

CAUTION:
Be careful not to allow engine coolant to contact drive belt.

DRAINING ENGINE COOLANT

1. Remove RH and LH undercovers.
2. Open radiator drain plug at the bottom of radiator, and then remove radiator cap.

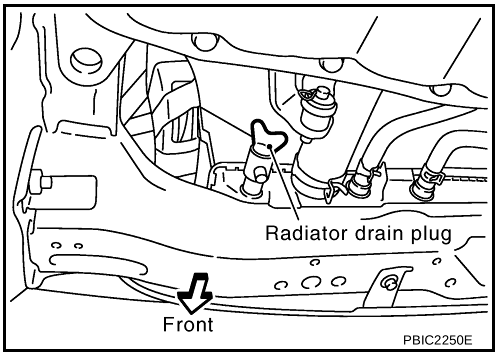

PBIC2250E

When drain all of engine coolant in the system, open water drain plug on cylinder block. Refer to EM-82, "CYLINDER BLOCK" **.**

3. Remove reservoir tank as necessary, and drain engine coolant and clean reservoir tank before installing.
4. Check drained engine coolant for contaminants such as rust, corrosion or discoloration. If contaminated, flush the engine cooling system. Refer to CO-10, "FLUSHING COOLING SYSTEM" .

REFILLING ENGINE COOLANT

1. Install reservoir tank if removed, and radiator drain plug.

   CAUTION:
   Be sure to clean drain plug and install with new O-ring.
   - **If water drain plug on cylinder block is removed, close and tighten it. Refer to EM-82, "CYLINDER BLOCK" .**
2. Make sure that each hose clamp has been firmly tightened.
3. Fill radiator and reservoir tank to the specified level.

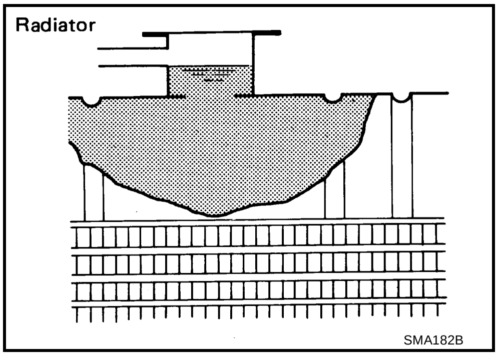

SMA182B

   - **Pour engine coolant through engine coolant filler neck slowly of less than 2 ℓ (2-1/8 US qt, 1-3/4 Imp qt) a minute to allow air in system to escape.**
   - **Use Genuine Nissan Long Life Antifreeze/ Coolant or equivalent mixed with water (distilled or demineralized). Refer to MA-10, "RECOMMENDED FLUIDS AND LUBRICANTS" .**

   Engine coolant capacity
   (With reservoir tank at “MAX” level)
   : Approx. 7.1 ℓ (7-1/2 US qt, 6-1/4 Imp qt)

   Reservoir tank engine coolant capacity
   (At “MAX” level)
   : 0.7 ℓ (3/4 US qt, 5/8 Imp qt)

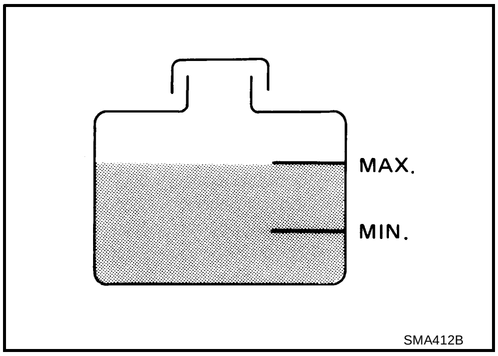

SMA412B

4. Install radiator cap.
5. Warm up until opening thermostat and water control valve. Standard for warming-up time is approximately 10 minutes at 3,000 rpm.
   - Make sure thermostat opening condition by touching radiator hose (lower) to see a flow of warm water.

   CAUTION:
   Watch water temperature gauge so as not to overheat the engine.
6. Stop the engine and cool down to less than approximately 50°C (122°F).
   - Cool down using fan to reduce the time.
   - If necessary, refill radiator up to filler neck with engine coolant.
7. Refill reservoir tank to “MAX” level line with engine coolant.
8. Repeat steps 3 through 6 two or more times with radiator cap installed until the engine coolant level no longer drops.
9. Check cooling system for leaks with the engine running.
10. Warm up the engine, and check for sound of engine coolant flow while running the engine from idle up to 3,000 rpm with heater temperature controller set at several position between “COOL” and “WARM”.
    - Sound may be noticeable at heater unit.
11. Repeat step 10 three times.
12. If sound is heard, bleed air from cooling system by repeating step 3 through 6 until the engine coolant level no longer drops.

FLUSHING COOLING SYSTEM

1. Install reservoir tank if removed, and radiator drain plug.

   CAUTION:

   Be sure to clean drain plug and install with new O-ring.

   - **If water drain plug on cylinder block is removed, close and tighten it. Refer to EM-82, "CYLINDER BLOCK" .**

2. Fill radiator and reservoir tank with water and reinstall radiator cap.
3. Run the engine and warm it up to normal operating temperature.
4. Rev the engine two or three times under no-load.
5. Stop the engine and wait until it cools down.
6. Drain water from the system. Refer to CO-8, "DRAINING ENGINE COOLANT" .
7. Repeat steps 1 through 6 until clear water begins to drain from radiator.

RADIATOR

PFP:21400

Removal and Installation

ABS00CKC

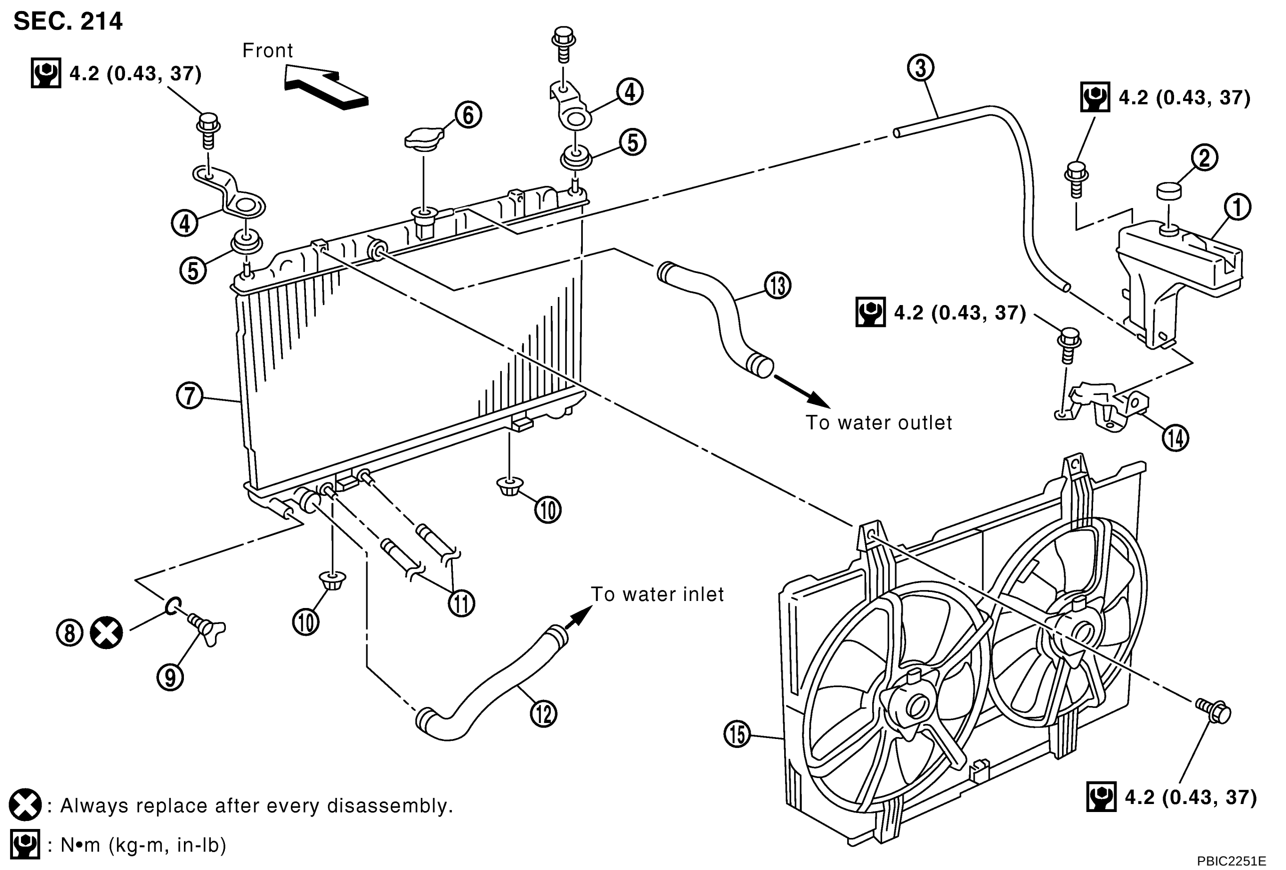

1.	Reservoir tank	2.	Reservoir tank cap	3.	Reservoir tank hose
4.	Radiator mounting bracket	5.	Mounting rubber (upper)	6.	Radiator cap
7.	Radiator	8.	O-ring	9.	Radiator drain plug
10.	Mounting rubber (lower)	11.	A/T fluid cooler hose	12.	Radiator hose (lower)
13.	Radiator hose (upper)	14.	Bracket	15.	Radiator cooling fan assembly

WARNING:
Do not remove radiator cap when the engine is hot. Serious burns could occur from high-pressure engine coolant escaping from radiator. Wrap a thick cloth around the cap. Slowly turn it a quarter of a turn to release built-up pressure. Carefully remove radiator cap by turning it all the way.

REMOVAL

1. Remove RH and LH undercovers.
2. Drain engine coolant. Refer to CO-8, "Changing Engine Coolant" .

   CAUTION:
   - **Perform this step when the engine is cold.**
   - **Do not spill engine coolant on drive belt.**
3. Remove air duct (inlet) and air duct assembly. Refer to EM-14, "AIR CLEANER AND AIR DUCT" .
4. Disconnect harness connector from fan motor, and move it aside.
5. Remove radiator hoses (upper and lower) and reservoir tank hose.
6. Remove A/T fluid cooler hoses. (A/T models)
   - Install plug to avoid leakage of A/T fluid.
7. Remove radiator mounting brackets.
8. Remove radiator and radiator cooling fan assembly.

   CAUTION:
   Do not damage or scratch A/C condenser and radiator core when removing.

9. Remove reservoir tank and bracket as necessary.

INSTALLATION

Install in the reverse order of removal.

INSPECTION AFTER INSTALLATION

- Check for leaks of engine coolant using the radiator cap tester adapter [SST: EG17650301 (J33984-A)] and a radiator cap tester (commercial service tool). Refer to CO-8, "CHECKING LEAKAGE" .
- Start and warm up the engine. Visually check if there is no leaks of engine coolant and A/T fluid (A/T models).

Checking Radiator Cap

ABS00CKD

- Check valve seat of radiator cap.
  - Check if valve seat is swollen to the extent that the edge of the plunger cannot be seen when watching it vertically from the top.
  - Check if valve seat has no soil and damage.

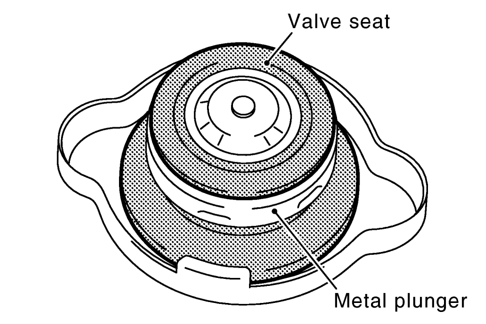

PBIC2816E

- Pull negative-pressure valve to open it and make sure that it closes completely when released.
  - Make sure that there is no dirt or damage on the valve seat of radiator cap negative-pressure valve.
  - Make sure that there are no unusualness in the opening and closing conditions of negative-pressure valve.

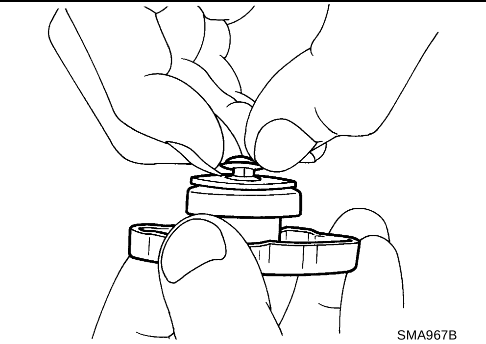
SMA967B

- Check radiator cap relief pressure.

Standard:

78 - 98 kPa (0.8 - 1.0 kg/cm^2 , 11 - 14 psi)

Limit:

59 kPa (0.6 kg/cm^2 , 9 psi)

  - When connecting radiator cap to a radiator cap tester (commercial service tool) and the radiator cap tester adapter [SST], apply engine coolant to radiator cap seal surface.
  - Replace radiator cap if there is an unusualness in negative-pressure valve, or if the relief pressure falls below the limit.

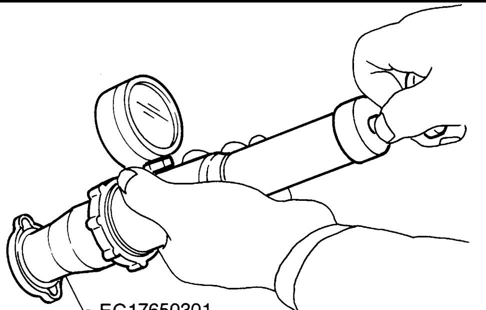

SLC755A

Checking Radiator

ABS00CKE

Check radiator for mud or clogging. If necessary, clean radiator as follows.

- Be careful not to bend or damage radiator fins.
- When radiator is cleaned without removal, remove all surrounding parts such as cooling fan, radiator shroud and horns. Then tape harness and connectors to prevent water from entering.

1. Apply water by hose to the back side of the radiator core vertically downward.
2. Apply water again to all the radiator core surfaces once per minute.
3. Stop washing if any stains no longer flow out from radiator.

4. Blow air into the back side of radiator core vertically downward.
   - Use compressed air lower than 490 kPa (5 kg/cm^2 , 71 psi) and keep distance more than 30 cm (11.8 in).
5. Blow air again into all the radiator core surfaces once per minute until no water sprays out.

RADIATOR (ALUMINUM TYPE)

PFP:21460

Disassembly and Assembly

ABS00CKF

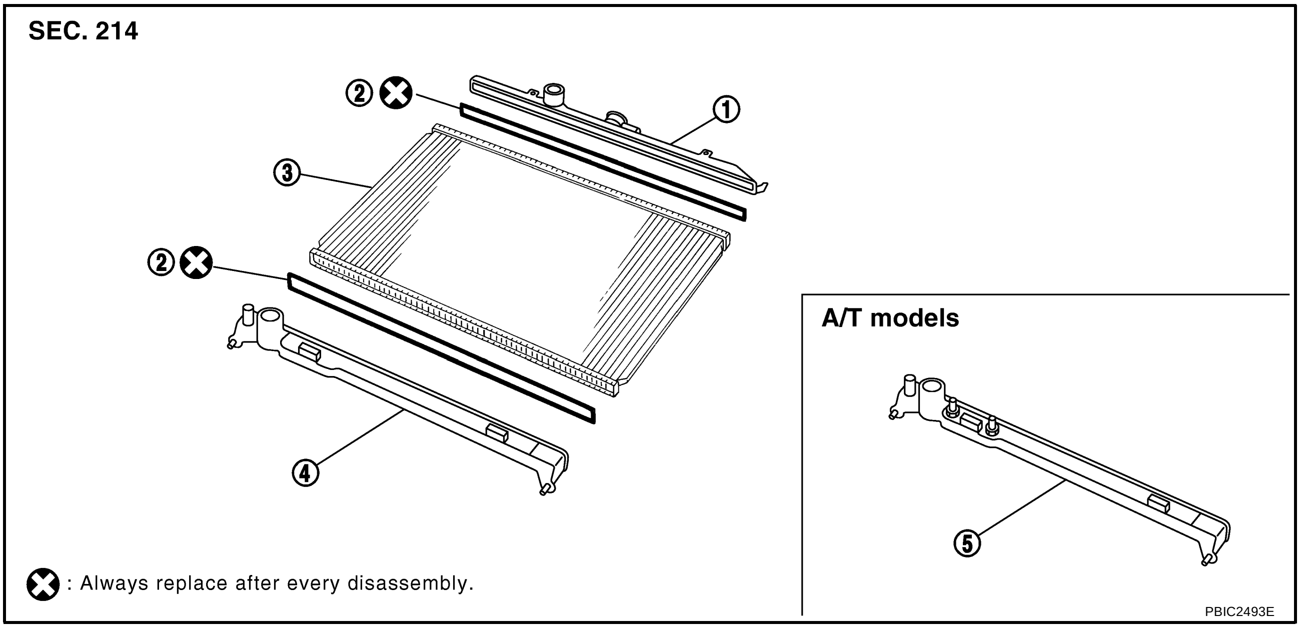

1. Upper tank
2. Sealing rubber
3. Core
4. Lower tank
5. Lower tank (with A/T fluid cooler)

PREPARATION

1. Attach spacer to tip of the radiator plate pliers A [SST].
   Spacer specification: 18 mm (0.71 in) wide × 8.5 mm (0.335 in) long × 1.5 mm (0.059 in) thick.

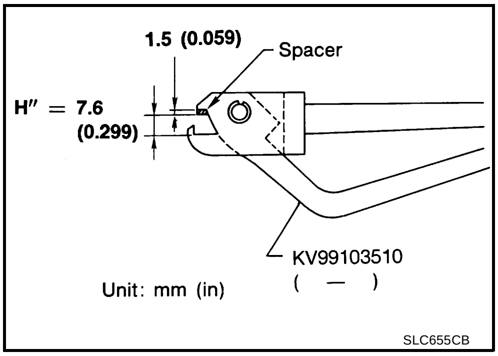

2. Make sure that when the radiator plate pliers A [SST: KV99103510 (—)] are closed dimension H″ is approx. 7.6 mm (0.299 in).
3. Adjust dimension H″ with spacer, if necessary.

DISASSEMBLY

1. Remove upper and lower tanks with the radiator plate pliers B [SST].

   CAUTION:

   Do not disassemble lower tank and A/T fluid cooler. (A/T models)

   NOTE:

   Regard lower tank and A/T fluid cooler as an assembly.

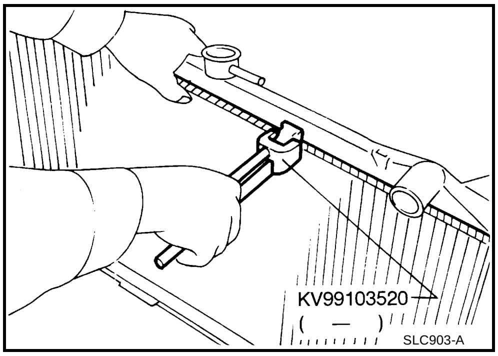

- Grip the crimped edge and bend it upwards so that radiator plate pliers B slips off.

  CAUTION:

  Do not bend excessively.

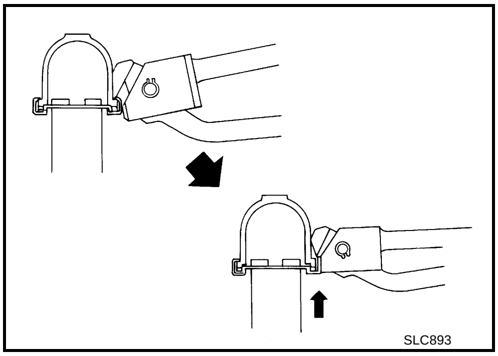

- In areas where the radiator plate pliers B cannot be used, use screwdriver to bend the edge up.

  CAUTION:

  Be careful not to damage tank.

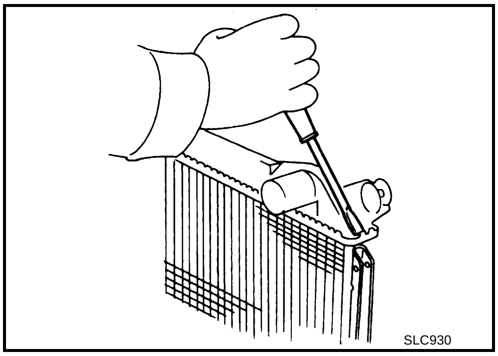

2. Remove sealing rubbers.
3. Make sure the edge stands straight up.

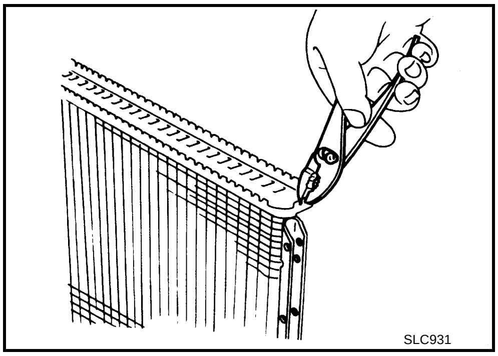

ASSEMBLY

1. Clean contact portion of tank.

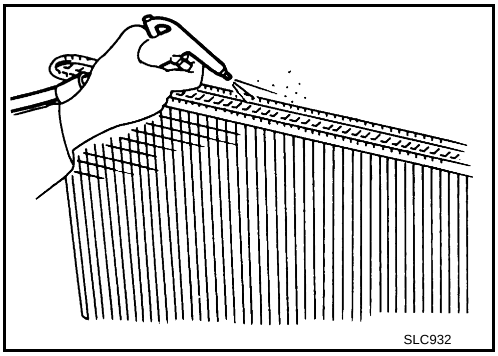

2. Install sealing rubbers while pushing it with fingers.

   CAUTION:
   Be careful not to twist sealing rubber.

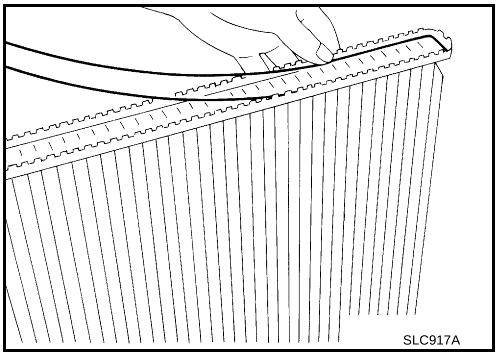

3. Caulk tank in numerical order as shown in the figure with the radiator plate pliers A [SST].

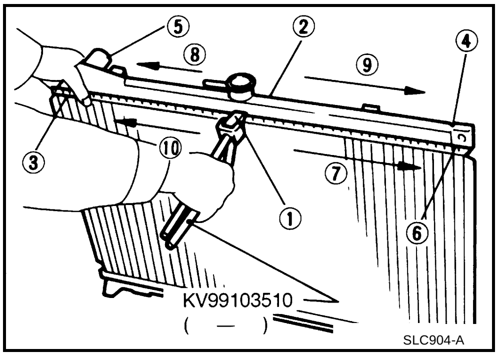

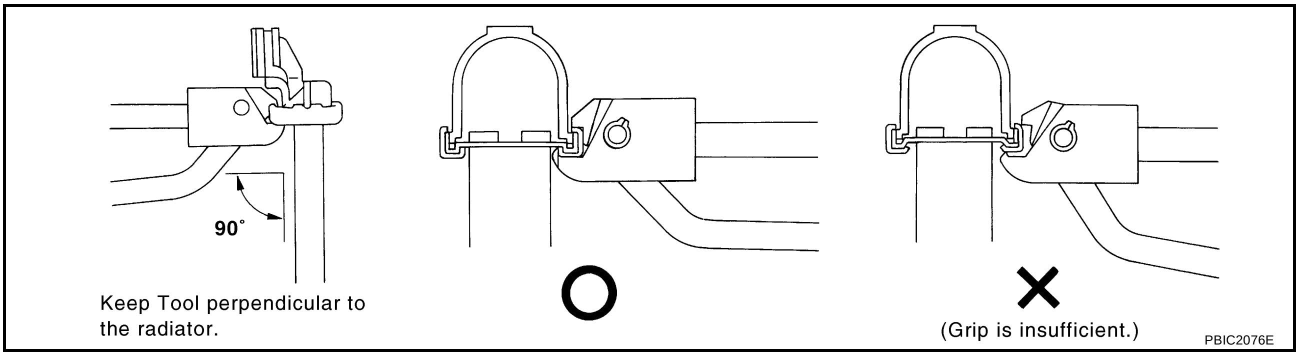

- Use pliers in the locations where the radiator plate pliers A cannot be used.

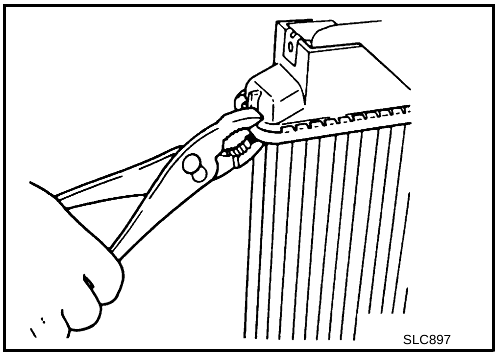

4. Make sure that the rim is completely crimped down.

   Standard height "H" : 8.0 - 8.4 mm (0.315 - 0.331 in)

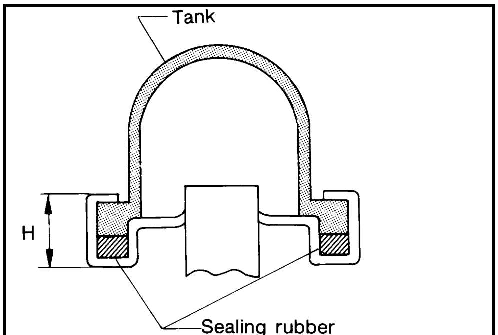

SLC554A

5. Make sure that there is no leakage.
   Refer to CO-17, "INSPECTION" .

INSPECTION

1. Apply pressure with the radiator cap tester adapter [SST] and a radiator cap tester (commercial service tool).

   Testing pressure

   : 157 kPa (1.6 kg/cm^2 , 23 psi)

   WARNING:
   To prevent the risk of hose coming undone while under pressure, securely fasten it down with hose clamp.

   CAUTION:
   Attach hose to A/T fluid cooler to seal its inlet and outlet. (A/T models)

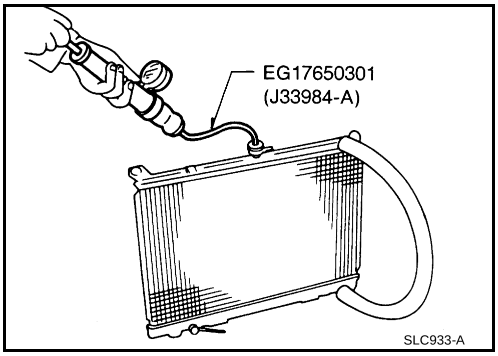

SLC933-A

2. Check for leakage by soaking radiator in a water container with the testing pressure applied.

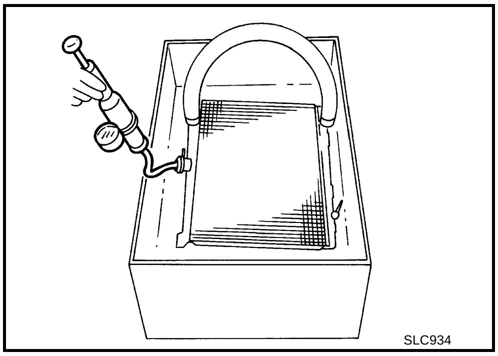
SLC934

COOLING FAN

PFP:21140

Removal and Installation

ABS00CKG

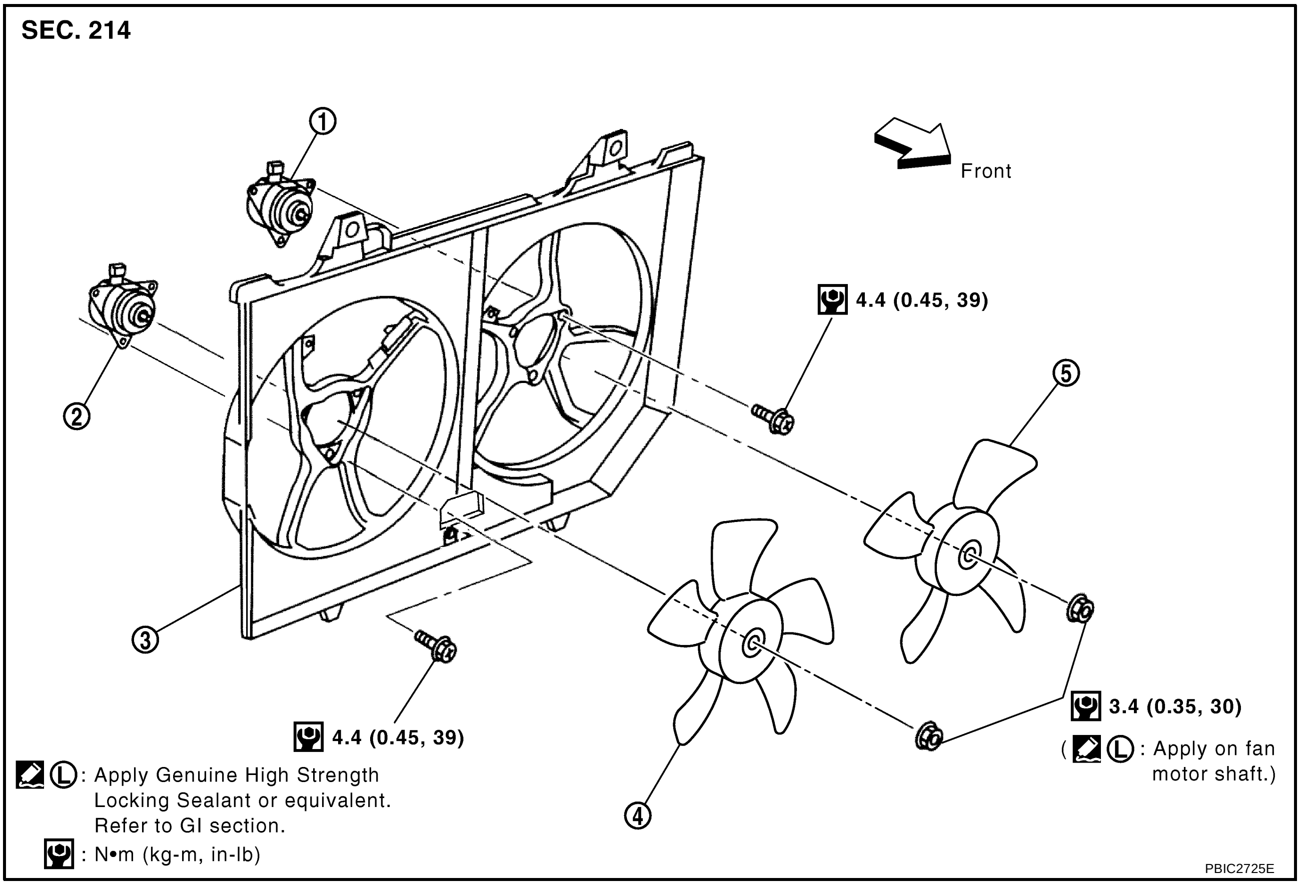

1.	Fan motor (LH)	2.	Fan motor (RH)	3.	Fan shroud
4.	Cooling fan (RH)	5.	Cooling fan (LH)		

REMOVAL

1. Drain engine coolant from radiator. Refer to CO-8, "Changing Engine Coolant" .

   CAUTION:
   - **Perform this step when the engine is cold.**
   - **Do not spill engine coolant on drive belt.**
2. Remove air duct (inlet) and air duct assembly. Refer to EM-14, "AIR CLEANER AND AIR DUCT" .
3. Disconnect radiator hose (upper) at radiator side. Refer to CO-11, "RADIATOR" .

   CAUTION:
   Do not spill engine coolant on drive belt.
4. Disconnect harness connectors from fan motors (RH and LH), and move them to aside.
5. Remove radiator cooling fan assembly.

   CAUTION:
   Be careful not to damage or scratch on radiator core.

INSTALLATION

Install in the reverse order of removal.

INSPECTION AFTER INSTALLATION

Make sure that fan motors (RH and LH) operate normally.

NOTE:
Cooling fans are controlled by ECM. For details, refer to EC-480, "DTC P1217 ENGINE OVER TEMPERATURE" .

Disassembly and Assembly

ABS00DAD

DISASSEMBLY

1. Remove cooling fans (RH and LH) from fan motors (RH and LH).
2. Remove fan motors (RH and LH) from fan shroud.

INSPECTION AFTER DISASSEMBLY

Cooling Fan

Inspect cooling fan for crack or unusual bend.

- If anything is found, replace cooling fan.

ASSEMBLY

Assemble in the reverse order of disassembly.

CAUTION:

Cooling fans and fan motors are different between RH and LH. Be careful not to misassemble them.

WATER PUMP

PFP:21020

Removal and Installation

ABS00CKH

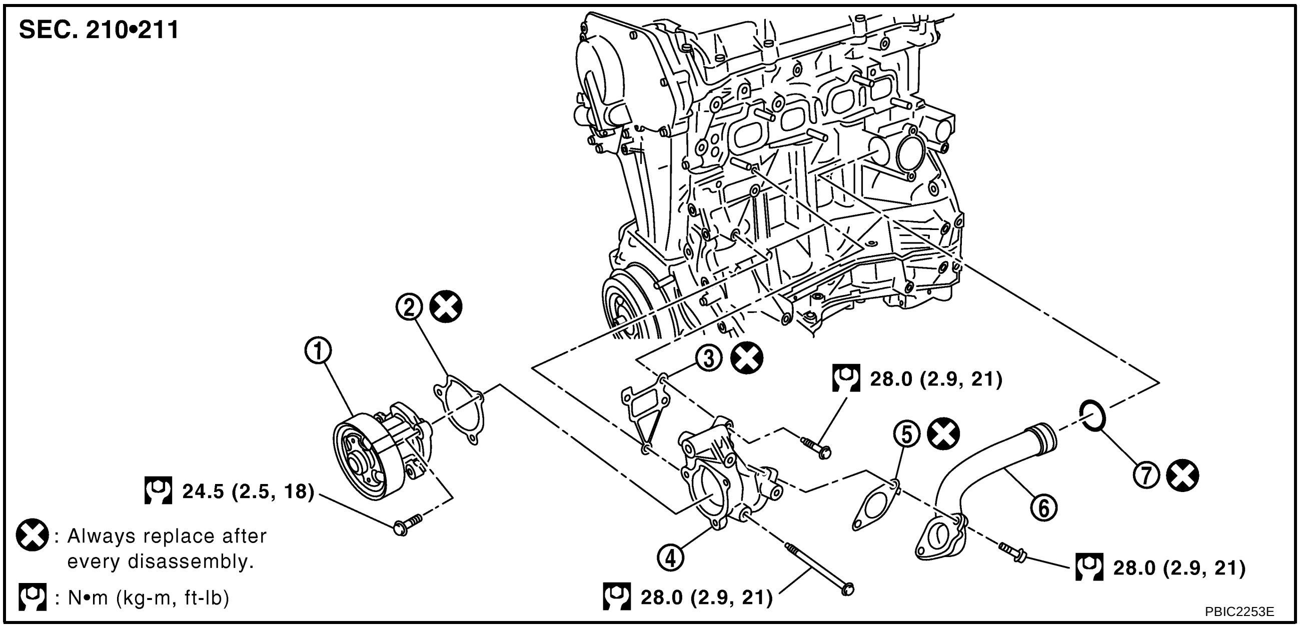

1.	Water pump	2.	Gasket	3.	Gasket
4.	Water pump housing	5.	Gasket	6.	Water pipe
7.	O-ring				

REMOVAL

1. Drain engine coolant from radiator drain plug at the bottom of radiator and from water drain plug on cylinder block. Refer to CO-8, "Changing Engine Coolant" and EM-82, "CYLINDER BLOCK" .

   CAUTION:
   - **Perform this step when the engine is cold.**
   - **Do not spill engine coolant on drive belt.**
2. Remove the following parts.
   - RH undercover
   - Drive belt; Refer to EM-11, "DRIVE BELTS" .
   - Drive belt auto-tensioner; Refer to EM-12, "Removal and Installation of Drive Belt Auto-Tensioner" .
3. Remove water pump with power tool.
   - Engine coolant will leak from cylinder block, so have a receptacle ready below.

   CAUTION:
   - **Handle water pump vane so that it does not contact any other parts.**
   - **Water pump cannot be disassembled and should be replaced as a unit.**
4. Remove water pump housing with the following procedure;

a. Remove alternator. Refer to SC-20, "CHARGING SYSTEM" .

b. Remove oil level gauge and oil level gauge guide. Refer to EM-22, "OIL PAN AND OIL STRAINER" .

   CAUTION:
   Plug the oil level gauge guide opening to prevent oil pan from entering foreign materials.

c. Remove mounting bolts for water pipe.

d. Remove water pump housing.

5. Remove exhaust manifold and three way catalyst assembly. Refer to EM-20, "EXHAUST MANIFOLD AND THREE WAY CATALYST" .
6. Remove water pipe.

INSPECTION AFTER REMOVAL

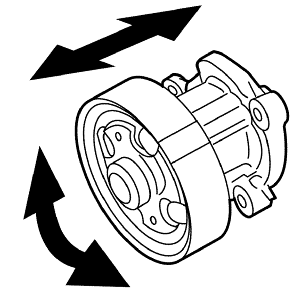
KBIA0155E

- Visually check if there is no significant dirt or rusting on water pump body and vane.
- Make sure that there is no looseness in vane shaft, and that it turns smoothly when rotated by hand.
- Replace water pump, if necessary.

INSTALLATION

Note the following, and install in the reverse order of removal.

- When inserting water pipe end into cylinder block, apply a neutral detergent to O-ring. Then insert it immediately.

INSPECTION AFTER INSTALLATION

- Check for leaks of engine coolant using the radiator cap tester adapter [SST: EG17650301 (J33984-A)] and a radiator cap tester (commercial service tool). Refer to CO-8, "CHECKING LEAKAGE" .
- Start and warm up the engine. Visually check if there is no leaks of engine coolant.

THERMOSTAT AND WATER CONTROL VALVE

PFP:21200

Removal and Installation

ABS00CKI

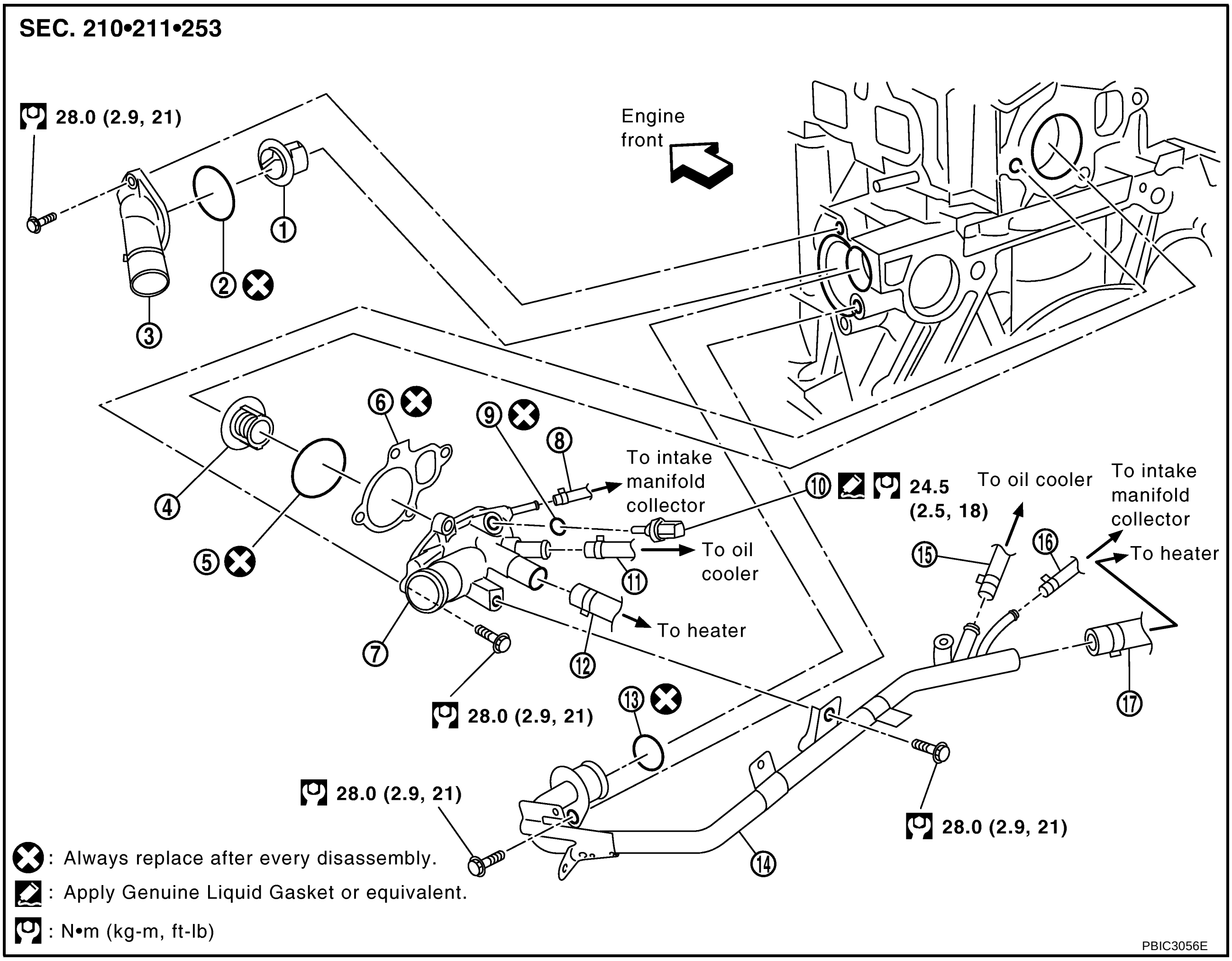

1.	Thermostat	2.	Rubber ring	3.	Water inlet
4.	Water control valve	5.	Rubber ring	6.	Gasket
7.	Water control valve housing (water outlet)	8.	Water hose	9.	Washer
10.	Engine coolant temperature sensor	11.	Water hose	12.	Heater hose
13.	O-ring	14.	Heater pipe	15.	Water hose
16.	Water hose	17.	Heater hose		

REMOVAL

1. Drain engine coolant from radiator drain plug at the bottom of radiator and from water drain plug on cylinder block. Refer to CO-8, "Changing Engine Coolant" and EM-82, "CYLINDER BLOCK" .

   CAUTION:
   - **Perform this step when the engine is cold.**
   - **Do not spill engine coolant on drive belt.**
2. Disconnect radiator hose (lower) at water inlet side. Refer to CO-11, "RADIATOR" .
3. Remove water inlet and thermostat.
4. Remove water control valve with the following procedure:

a. Disconnect radiator hose (upper) at water control valve housing (water outlet) side.
b. Disconnect harness connector from engine coolant temperature sensor.
c. Disconnect water hoses.
d. Remove heater pipe and heater hose.
e. After removing water control valve housing (water outlet), remove water control valve.

INSPECTION AFTER REMOVAL

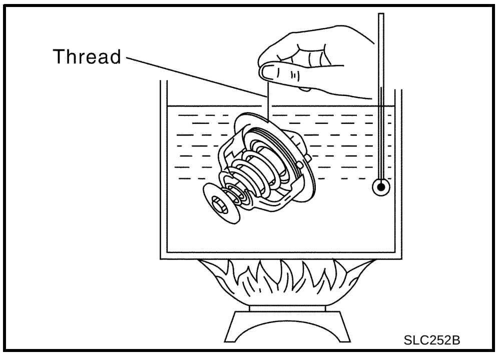

- Place a thread so that it is caught in the valves of thermostat and water control valve. Immerse fully in a container filled with water. Heat while stirring. (The example in the figure shows thermostat.)
- The valve opening temperature is the temperature at which the valve opens and falls from the thread.
- Continue heating. Check the maximum valve lift amount.

  NOTE:
  The maximum valve lift amount standard temperature for water control valve is the reference value.
- After checking the maximum valve lift amount, lower the water temperature and check the valve closing temperature.

Standard:

Items	Thermostat	Water control valve
Valve opening temperature	80.5 - 83.5°C (177 - 182°F)	93.5 - 96.5°C (200 - 206°F)
Maximum valve lift	8 mm/ 95°C (0.315 in/ 203°F)	8 mm/ 108°C (0.315 in/ 226°F)
Valve closing temperature	77°C (171°F)	90°C (194°F)

- If out of the standard, replace either or both thermostat and water control valve.

INSTALLATION

Note the following, and install in the reverse order of removal.

Thermostat and Water Control Valve

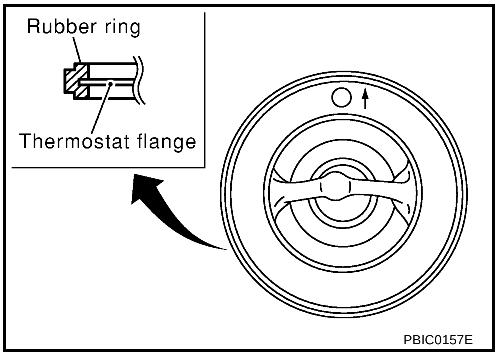

- Install thermostat with making rubber ring groove fit to thermostat flange with the whole circumference. (The example in the figure shows thermostat.)

  NOTE:
  Same procedure is applied for installation of water control valve.

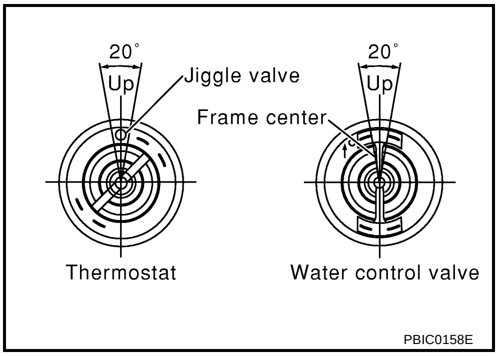

- Install thermostat with jiggle valve facing upwards. (The position deviation may be within the range of 20 degrees as shown in the figure.)
- Install water control valve with the arrow facing up and the frame center part facing upwards. (The position deviation may be within the range of 20 degrees as shown in the figure.)

Heater Pipe Installation

Apply a neutral detergent to O-ring, then quickly insert the insertion part of heater pipe into cylinder block.

INSPECTION AFTER INSTALLATION

- Check for leaks of engine coolant using the radiator cap tester adapter [SST: EG17650301 (J33984-A)] and a radiator cap tester (commercial service tool). Refer to CO-8, "CHECKING LEAKAGE" .
- Start and warm up the engine. Visually check if there is no leaks of engine coolant.

SERVICE DATA AND SPECIFICATIONS (SDS)

PFP:00030

Standard and Limit

ABS00CKJ

ENGINE COOLANT CAPACITY (APPROXIMATE)

Unit: ℓ (US qt, Imp qt)

Engine coolant capacity (With reservoir tank at “MAX” level)	7.1 (7-1/2, 6-1/4)
Reservoir tank engine coolant capacity (At “MAX” level)	0.7 (3/4, 5/8)

RADIATOR

Unit: kPa (kg/cm^2 , psi)

Cap relief pressure	Standard	78 - 98 (0.8 - 1.0, 11- 14)
	Limit	59 (0.6, 9)
Leakage test pressure		157 (1.6, 23)

THERMOSTAT

Valve opening temperature	80.5 - 83.5°C (177 - 182°F)
Maximum valve lift	8 mm/ 95°C (0.315 in/ 203°F)
Valve closing temperature	77°C (171°F)

WATER CONTROL VALVE

Valve opening temperature	93.5 - 96.5°C (200 - 206°F)
Maximum valve lift	8 mm/ 108°C (0.315 in/ 226°F)*
Valve closing temperature	90°C (194°F)

*: Reference data